REV	DATE	DESCRIPTION
00	15/05/2020	INITIAL REVISION

NOTES:

1. (⊥) ALL VERTICAL SUPPORTS ARE PERPENDICULAR.
2. ▱ FLATNESS OF .5MM IS APPLIED BY DEFAULT.
3. ◺ WELD BEAD OF 2MM RADIUS IS FOLLOWED.
4. ▽▽ SURFACE FINISH MEDIUM TO SMOOTH IS USED.
5. ALL TUBES ARE AS PER APL APOLLO STANDARD. CHANGES MAY EFFECT THE LOAD CAPACITY.
6. ALL HORIZONTAL AND VERTICAL TUBES ARE PERPENDICULAR TO EACH OTHER WITH ±1 DEG.
7. FINE WELDNG IS REQUIRED AS PER MENTIONED DETAILS AND FINISHING.
8. HIGHER CURRENT WELDING MAY AFFECT THE BRITTLENESS OF MATERIAL WHICH LATER MAY RAISE TO WEAKENING OF STRUCTURE.
9. FABRICATORS ARE ALLOWED TO USE FITTINGS/FRAMES/SUPPORTS AS NEEDED AND THE SAME MUST BE COMMUNICATED BACK TO ENGINEERING TEAM.
10. LENGTH OF ALL LONGITUDINAL FRAMES ARE FOR REFERENCE ONLY AND SUBJECTED TO CHANGE PER REQUIREMENT.

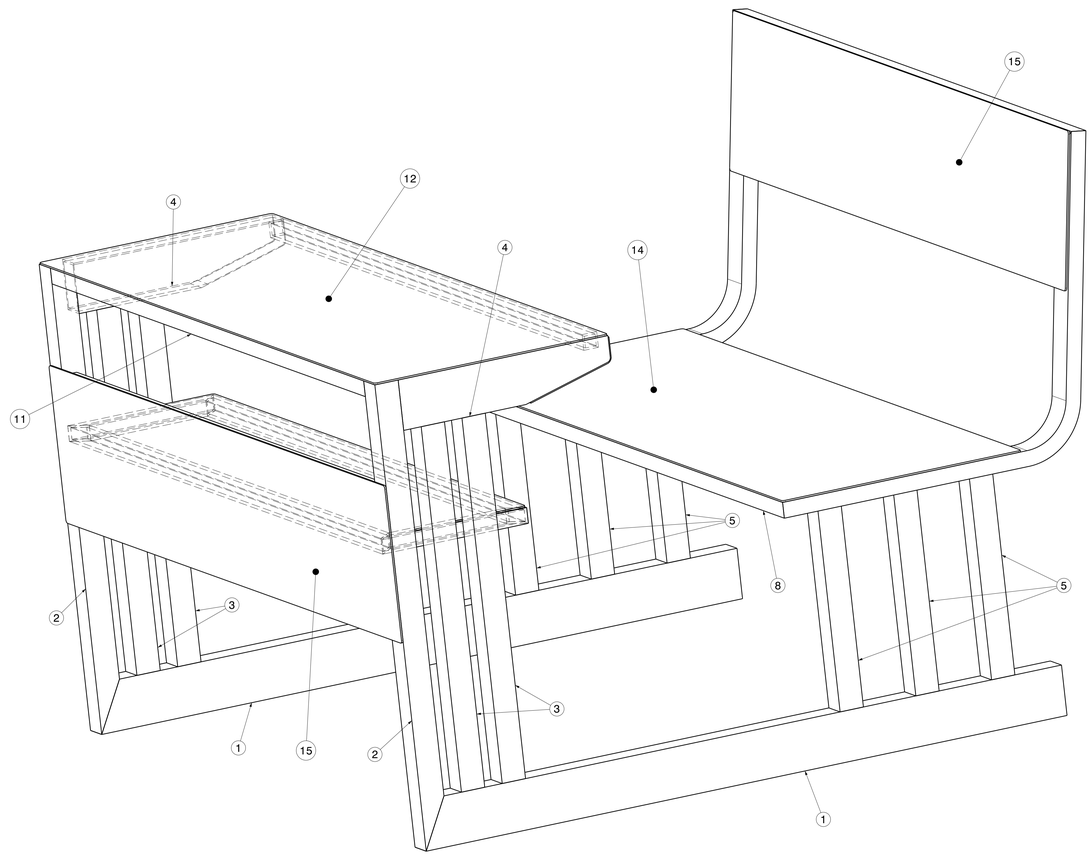

Isometric view-1

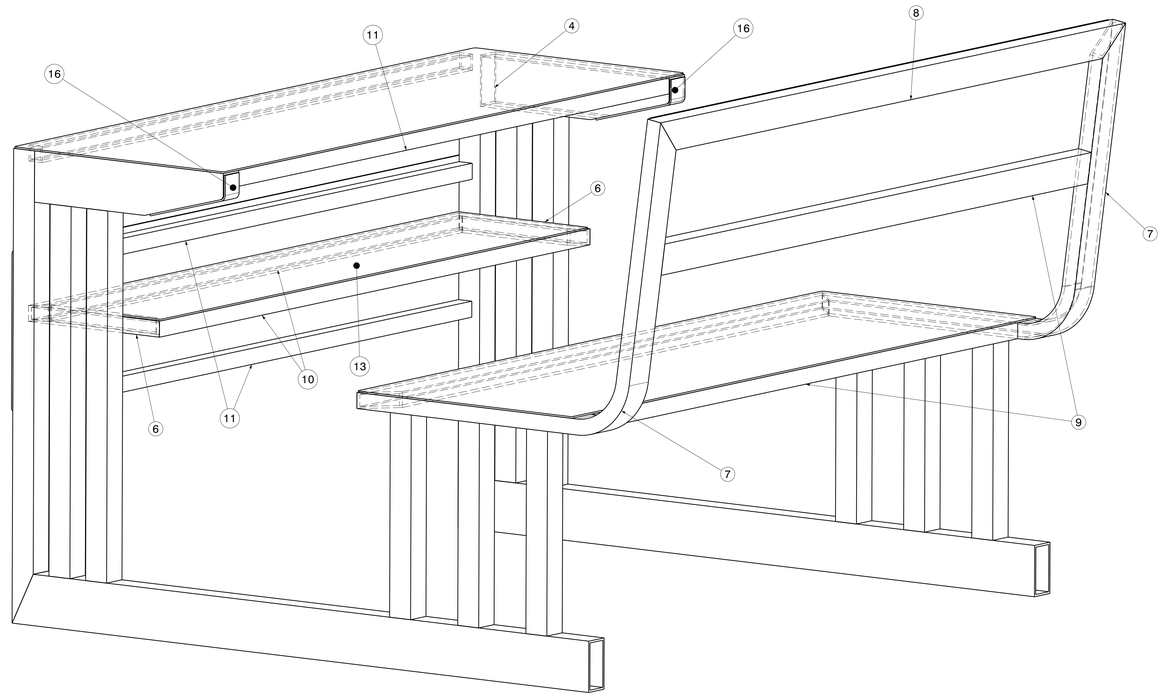

Isometric view-2

ITEM NO.	PART NUMBER	DESCRIPTION	QTY.	Wt(Kg)/Each
16	Plate 4-BOP	184 X 36, T=2.5	2	0.2
15	Plate 3-BOP	1200 X 250, T=2.5	2	5.9
14	Plate 2-BOP	1210 X 410, T=2.5	1	9.7
13	Plate 1-BOP	1114 X 250, T=2.5	1	5.5
12	Plate -BOP	1200 X 400, T=2.5	1	9.4
11	Sq Tube School Bench 1 Frame 11	25 X 25 X 3.2 X 1120	4	2.5
10	Sq Tube School Bench 1 Frame 10	25 X 25 X 3.2 X 1120	2	2.4
9	Rect Tube School Bench 1 Frame 9	50 X 25 X 3.2 X 1110	2	3.8
8	Rect Tube School Bench 1 Frame 8	50 X 25 X 3.2 X 1210	2	4.0
7	Rect Tube School Bench 1 Frame 7	50 X 25 X 3.2 X 965	2	3.2
6	Sq Tube School Bench 1 Frame 6	25 X 25 X 3.2 X 250	2	0.5
5	Sq Tube School Bench 1 Frame 5	40 X 40 X 3.2 X 320	6	1.2
4	Rect Tube School Bench 1 Frame 4	80 X 40 X 3.2 X 360	2	1.8
3	Sq Tube School Bench 1 Frame 3	40 X 40 X 3.2 X 580	4	2.1
2	Sq Tube School Bench 1 Frame 2	40 X 40 X 3.2 X 740	2	2.6
1	Rect Tube School Bench 1 Frame 1	80 X 40 X 3.2 X 1100	2	6.2

This drawing is our property. It can't be reproduced or communicated without our written agreement.

APL APOLLO TUBES LTD.

DRAWING TITLE: SCHOOL BENCH 1

DRAWN BY: SB	DATE: 15/05/2020		
CHECKED BY: P2P Analysis & Solutions	DATE: 15/05/2020	SIZE: A0	DRAWING NUMBER: P2P SCHOOL BENCH 1 — REV: 00
DESIGNED BY: P2P Analysis & Solutions	DATE: 15/05/2020	SCALE: As Indicated	WEIGHT(kg): 0kg — SHEET 1 OF 5

UNLESS OTHERWISE SPECIFIED
DIMENSION ARE IN MM
VIEWS: THIRD ANGLE PROJECTION

REV	DATE	DESCRIPTION
00	15/05/2020	INITIAL REVISION

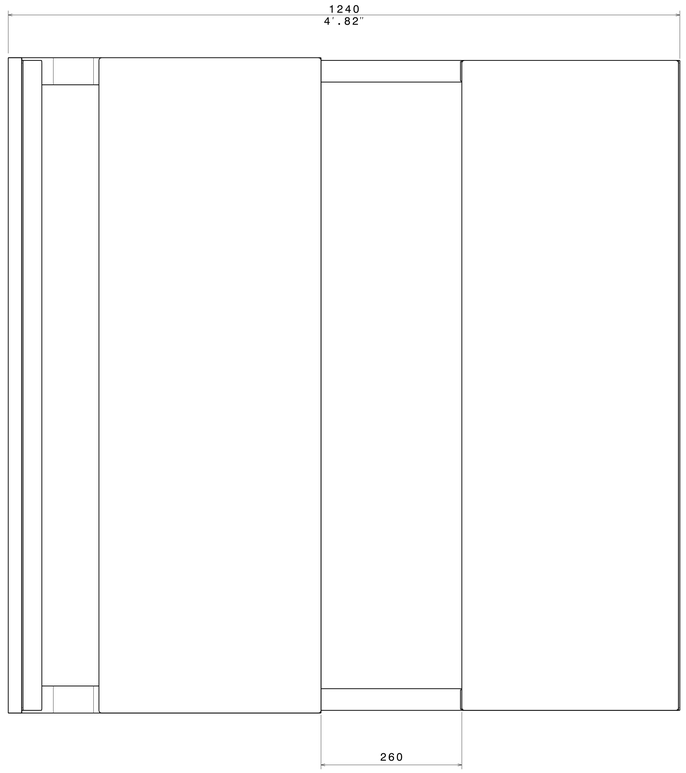

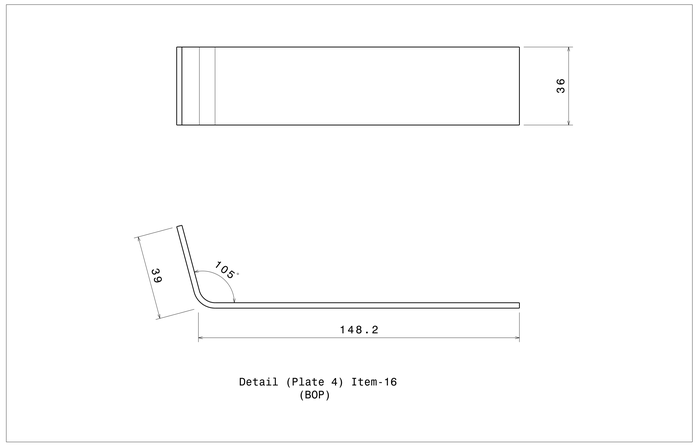

Detail (Plate 4) Item-16
(BOP)

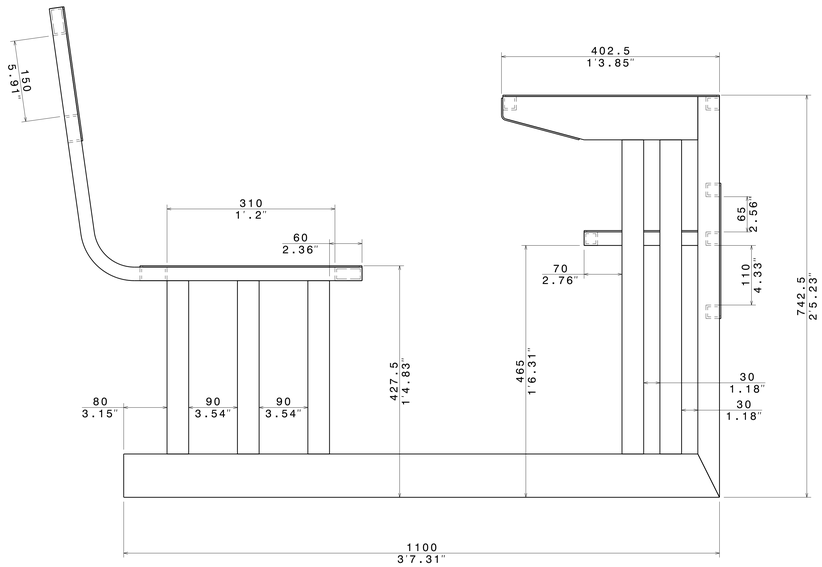

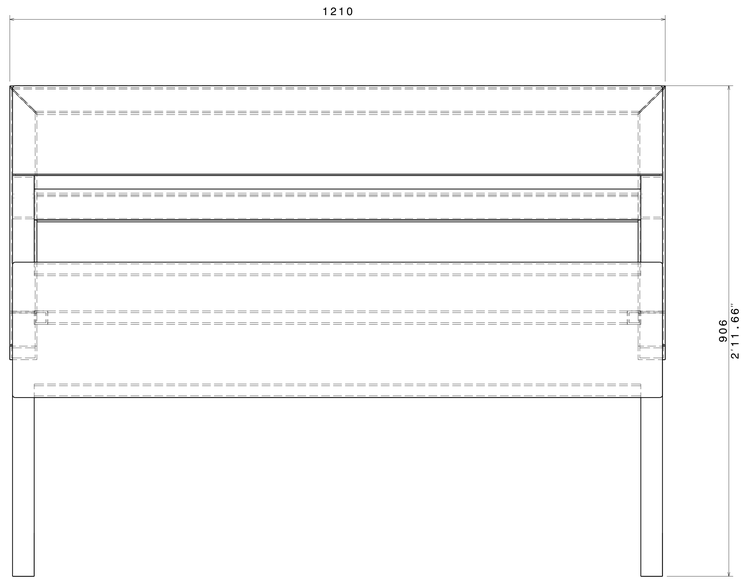

UNLESS OTHERWISE SPECIFIED
DIMENSION ARE IN MM
VIEWS: THIRD ANGLE PROJECTION

This drawing is our property. It can't be reproduced or communicated without our written agreement.

DRAWN BY SB	DATE 15/05/2020	APL APOLLO TUBES LTD.
CHECKED BY P2P Analysis & Solutions	DATE 15/05/2020	DRAWING TITLE SCHOOL_BENCH 1
DESIGNED BY P2P Analysis & Solutions	DATE 15/05/2020	SIZE A0 · DRAWING NUMBER P2P_SCHOOL_BENCH 1 · REV 00
		SCALE NONE · WEIGHT(kg) XXX · SHEET 2 OF 5

REV	DATE	DESCRIPTION
00	15/05/2020	INITIAL REVISION

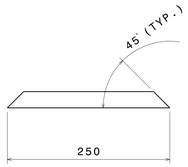

ITEM 6 DETAILS
Sq Tube School Bench 1 Frame 6

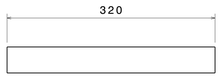

ITEM 5 DETAILS
Sq Tube School Bench 1 Frame 5

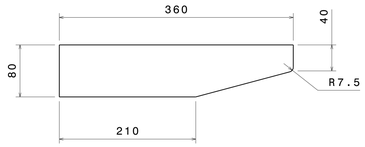

ITEM 4 DETAILS
Rect Tube School Bench 1 Frame 4

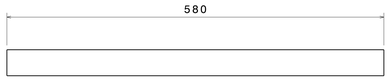

ITEM 3 DETAILS
Sq Tube School Bench 1 Frame 3

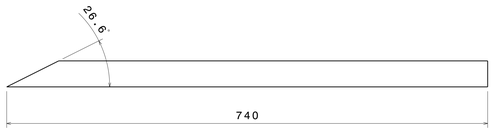

ITEM 2 DETAILS
Sq Tube School Bench 1 Frame 2

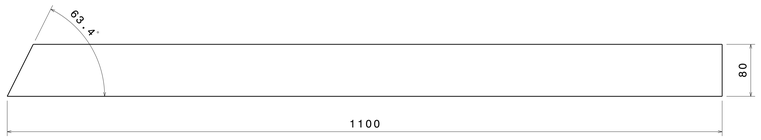

ITEM 1 DETAILS
Rect Tube School Bench 1 Frame 1

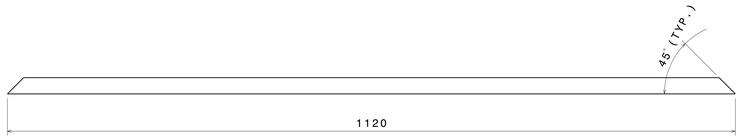

ITEM 10 DETAILS
Sq Tube School Bench 1 Frame 10

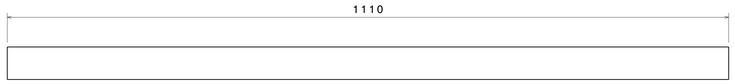

ITEM 9 DETAILS
Rect Tube School Bench 1 Frame 9

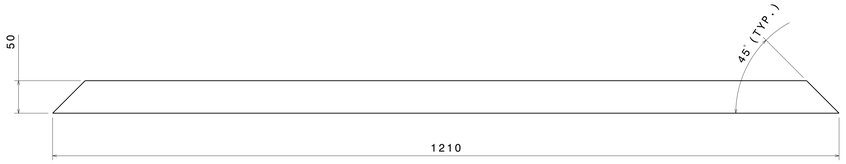

ITEM 8 DETAILS
Rect Tube School Bench 1 Frame 8

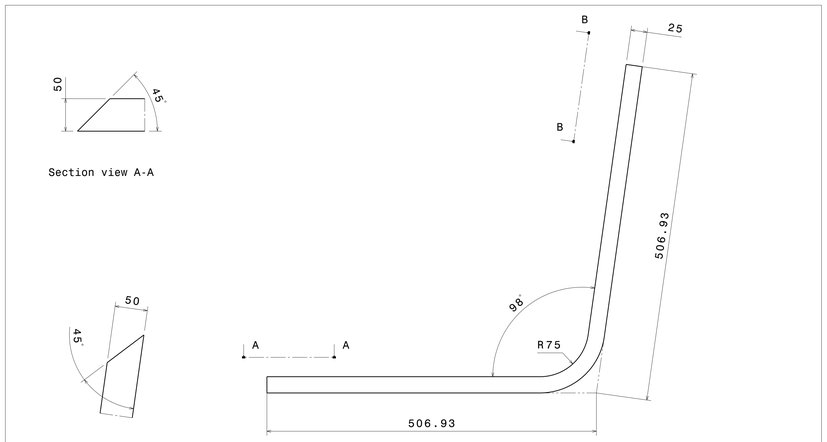

ITEM 7 DETAILS
Rect Tube School Bench 1 Frame 7

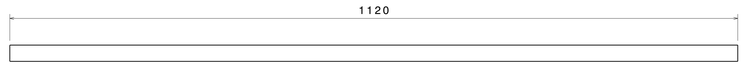

ITEM 11 DETAILS
Sq Tube School Bench 1 Frame 11

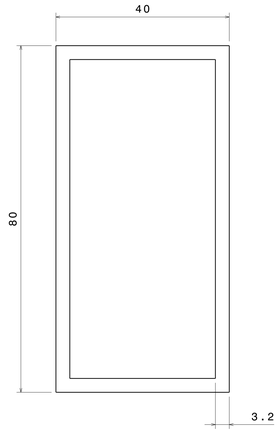

Section Detail of ITEM 1 & 4
Scale: 2:1

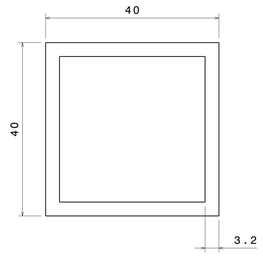

Section Detail of ITEM 2,3 & 5
Scale: 2:1

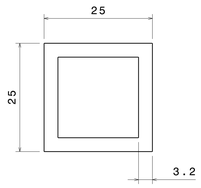

Section Detail of ITEM 6,10 & 11
Scale: 2:1

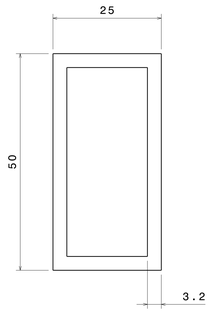

Section Detail of ITEM 7,8 & 9
Scale: 2:1

UNLESS OTHERWISE SPECIFIED
DIMENSION ARE IN MM
VIEWS: THIRD ANGLE PROJECTION

This drawing is our property. It can't be reproduced or communicated without our written agreement.

APL APOLLO TUBES LTD.

DRAWN BY: SB	DATE: 15/05/2020	DRAWING TITLE: SCHOOL_BENCH 1
CHECKED BY: P2P Analysis & Solutions	DATE: 15/05/2020	SIZE: A0 / DRAWING NUMBER: P2P_SCHOOL_BENCH 1 / REV: 00
DESIGNED BY: P2P Analysis & Solutions	DATE: 15/05/2020	SCALE: NONE / WEIGHT(kg): XXX / SHEET 3 OF 5